CANE APRON FOR VERSACOOLER II MODELS

Suggested Specification

Cane apron for use with PG*AC models. Not compatible with contactless PG*AC models.

Features:	· Cane apron designed for use in split-level applications · Provides the mandatory 27" (686 mm) floor-to-undersiderequirement for detection in a circulation path when properlyinstalled · Available in variety of finishes to match existing fountain· · Durable greystone and sandstone powder coat overgalvanized steel
Finish:	· Greystone 035174-002 · Sandstone 035174-001 · Stainless Steel 035174-003
Dimensions:	16" x 8" x 5-13/16"
Approx. Net Weight	2 lbs
Installation Location:	Indoor

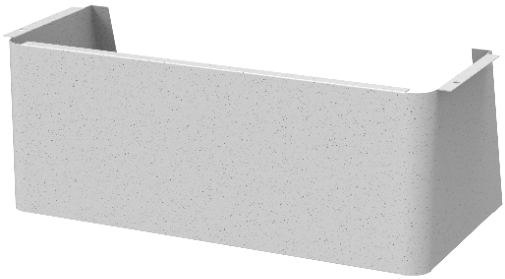

Ships in one box.

Installation

- Prior to rough-in consult with local, state and federal codes for proper mounting height
- Shipped with complete instructions

MODEL:_____ QTY:_____

PROJECT:_____

CONTACT:_____

NOTES: _____

APPROVAL:_____ DATE:_____

Specifications subject to change without notice

CANE APRON FOR VERSACOOLER II MODELS

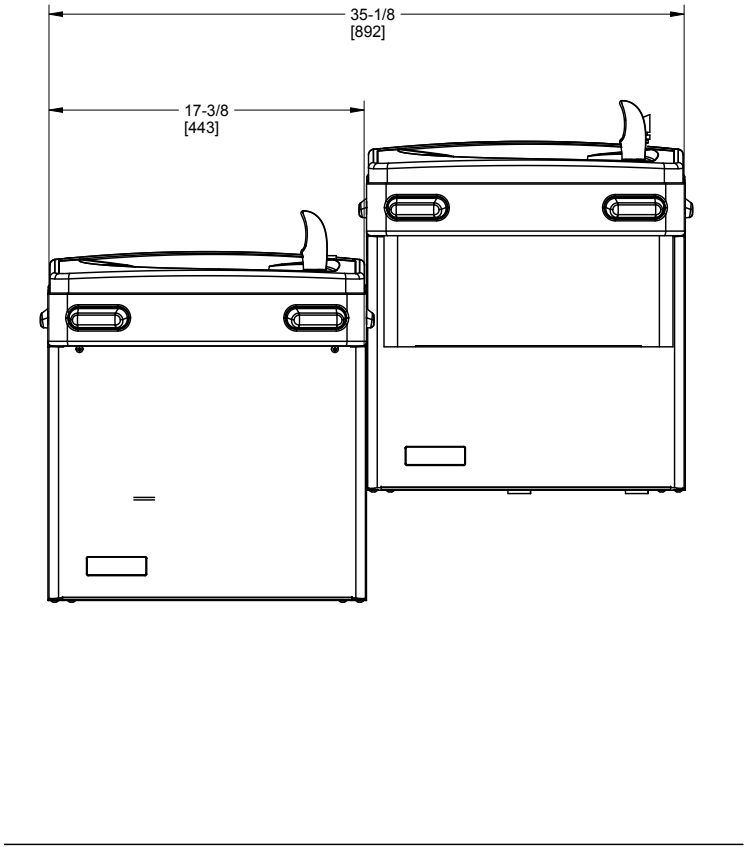

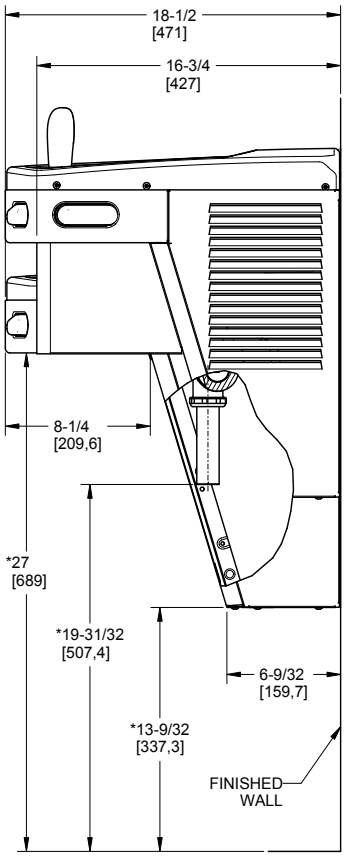

OASIS is a registered trademark of LVD Acquisition, LLC dba OASIS International, © 2025 LVD Acquisition | AS0472-F-2502